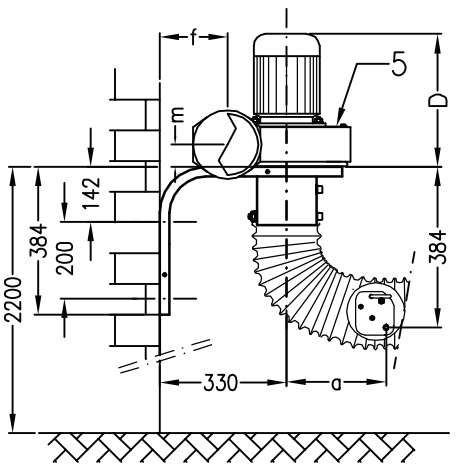

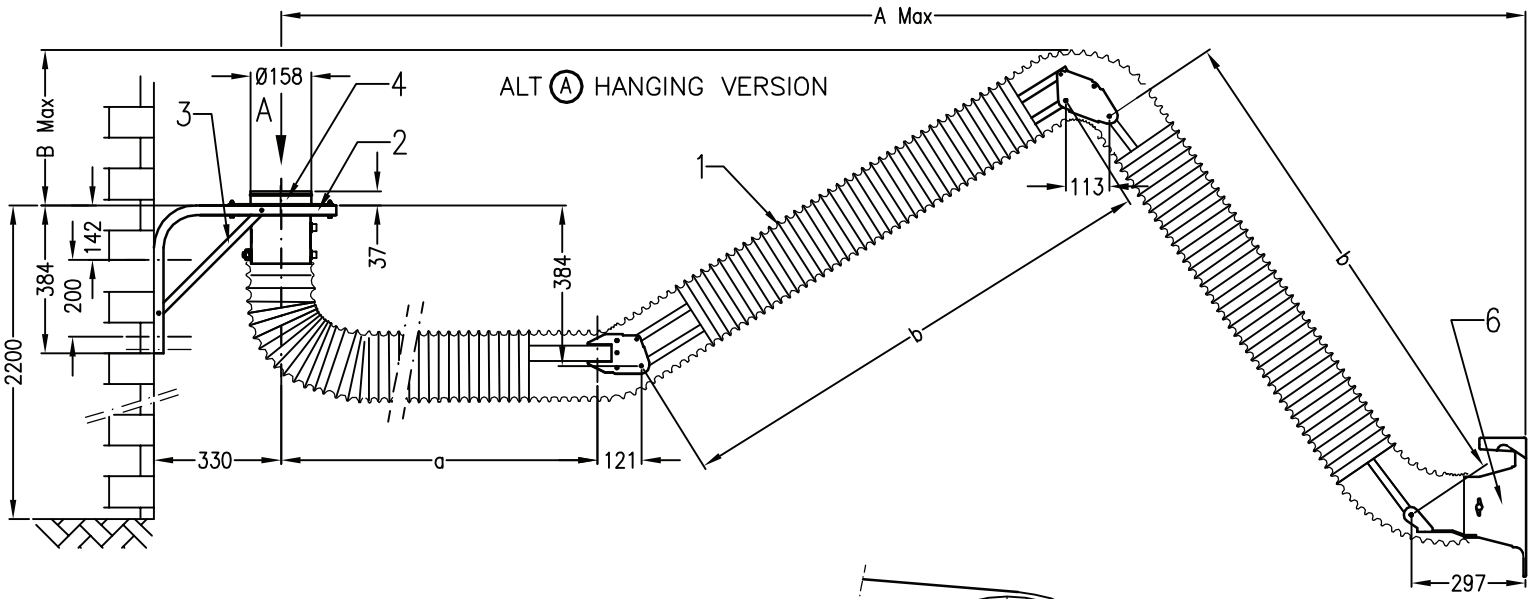

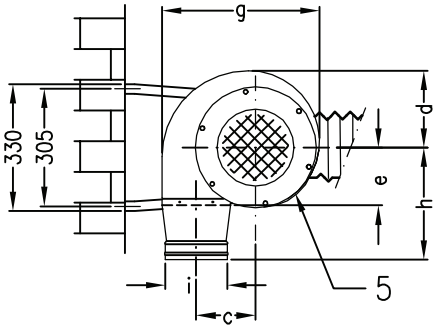

Alt A1= with FAN

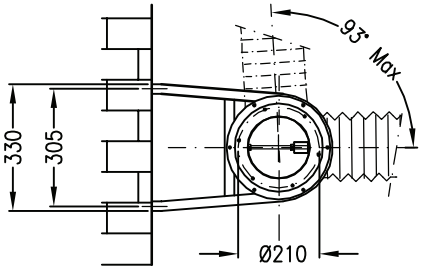

VIEW FROM "A"

Alt A2= with FITTING and EXTENTION

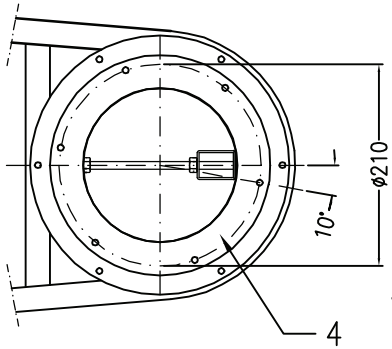

VIEW from "A" DETAIL

EXHAUST FAN	m	51.5	59
	i	123	148/158
	h	292	301
	g	376	409
	f	198	176
	e	160	151
	d	176	200
	c	132	154
	D	329	359
	AIR FLOW Acm/h	750	1200
	MODEL	EKM4xx	EKN4xx

INSTALLATION ARMS						
Brace	NO			YES		
b	750	1300	750	1300	750	1300
a	178	178	980	980	1920	1920
C max	1207	1749	1746			
B max	444	986	447	989	447	989
A max	2209	3309	3011	4111	3951	5051
Code	EK0216	EK0316	EK1316	EK1416	EK2416	EK2516
Length	2000	3000		4000		5000

All dimensions in mm

POS	DESCRIPTION
7	FLANGE
6	HOOD
5	FAN
4	FITTING
3	BRACKET BRACE
2	WALL BRACKET
1	EK ARM

REV.	DATE	DESCRIPTION
M	19.03.09	Aggiunti SH 3 e 4 (versione braccio esterno)
L	23.02.09	VARIATO TABELLA
I	19.02.09	VARIATO TABELLA

DWN LDL — CHK — DWN PPC — CHK — DWN PPC — CHK

GENERAL NORMAL
RIF. DIS. R826-00

CONFIDENTIAL PROPERTY OF AIRBRAVO
REPRODUCTION OF THIS PRINT OR
UNAUTHORIZED USE IS PROHIBITED

WEIGHT: –

TECHNICAL DEPARTMENT
TEL. (06)5219748-0067 FAX 52311934
I-00125 ROMA (RM)
V.LE ENRICO ORTOLANI 246

AIRBOX
Occupational Air Pollution Control

DESCRIPTION: DESCRIPTIVE with DIMENSIONS
UPPER ASSEMBLY: EK NEW INSTALLATION
DWG N.: A4 210x297
SCALE: VAR — SHEET N. 1 OF 4 — FILE: R08-053
DWN LDL — DATE: 19.03.09 — DWG N. R08-053 — REV. M — CODE
FOR APPROVAL: — DATE:

ALT (B) STANDING VERSION

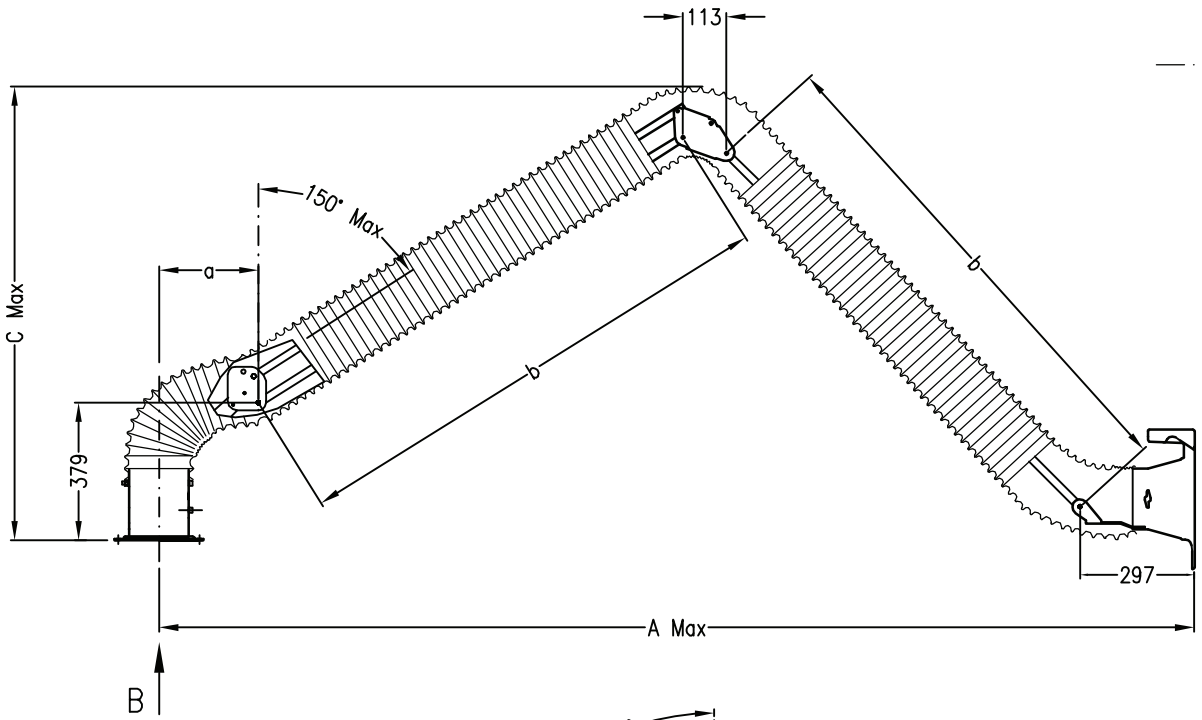

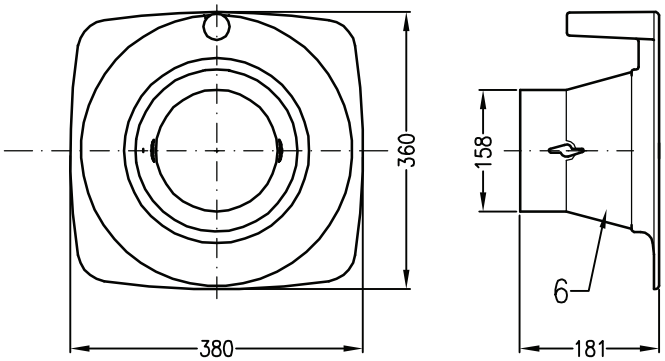

HOOD DETAIL

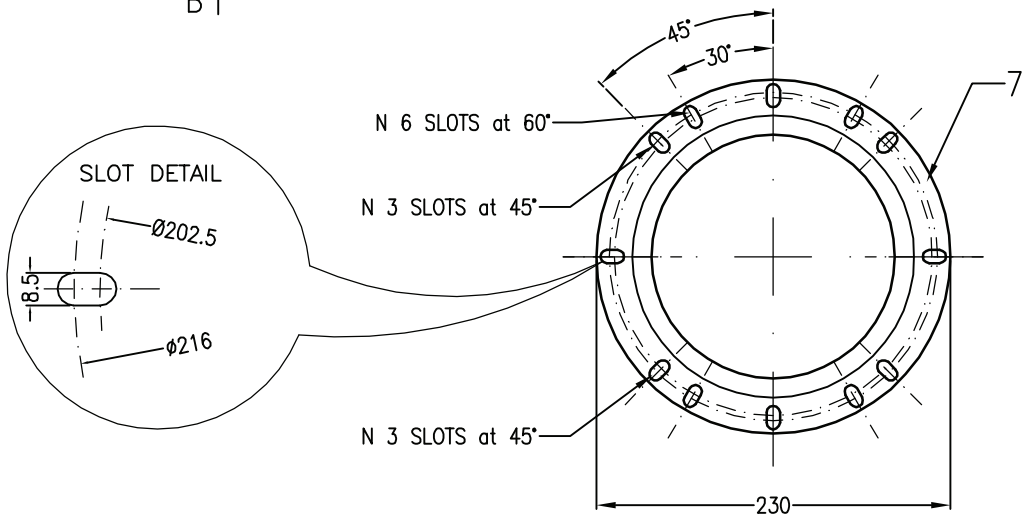

VIEW FROM "B"

REV. M	Aggiunti SH 3 e 4 (versione braccio esterno)	DWN	GENERAL NORMAL RIF. DIS. R826-00	CONFIDENTIAL PROPERTY OF AIRBRAVO REPRODUCTION OF THIS PRINT OR UNAUTHORIZED USE IS PROHIBITED	WEIGHT: –
DATE 19.03.09		CHK	TECHNICAL DEPARTMENT TEL. (06)5219748-0067 FAX 52311934 I-00125 ROMA (RM) V.LE ENRICO ORTOLANI 246	AIRBOX Occupational Air Pollution Control	
REV. L	VARIATO TABELLA	DWN	DESCRIPTION DESCRIPTIVE with DIMENSIONS		
DATE		CHK	UPPER ASSEMBLY: EK NEW INSTALLATION		DWG N.
REV. I	VARIATO TABELLA	DWN	SCALE: VAR / SHEET N. 2 OF 4	FILE: R08-053	A4 210x297
DATE 19.02.09		CHK	DWN LDL / DATE: 19.03.09 / FOR APPROVAL: / DATE:	DWG N. R08-053	REV. M / CODE